McDonnell Aircraft XV-1 Convertiplane

The Convertiplane was the most publicized product of the Helicopter Division Of McDonnell Aircraft Company, a part of the company that probably few people remember today. Although officially long disbanded, the personnel of that division were still active in the McDonnell-Douglas Corporation, engineering the VTOL and STOL activities for many years.

History

In December 1948 the McDonnell Aircraft Company (MAC) submitted a preliminary study of high speed rotorcraft to the Office of Naval Research (ONR). MAC's conclusion was that the most promising configuration was one that used its engine to power a propeller for forward flight and to supply compressed air to fuel burning jets on the rotor tips for hovering flight. ONR responded by giving MAC a contract to investigate in more detail the aerodynamic characteristics of lightly loaded rotors at high advance ratios (high forward speeds), to study means of rotor jet propulsion and to apply the practical results
of the studies to a high speed ship to shore air vehicle.

This last contract fostered two independent, but parallel, projects; the XHCH-1 and more indirectly, the XV-1. The XHCH-1 was a 30 seat vertical takeoff and landing assault aircraft for the Marines. Three articles were ordered (BuAer numbers 133736-738) but the program was canceled when research and development funds ran out.

The XV-1 also benefited from this study contract, although it was designed specifically to meet an early 1950 joint Army/ Air Force design competition for VTOL aircraft. The Army goal was to develop a relatively small aircraft for use by Army field forces as a liaison type and to furnish data for future larger designs. Requirements included a top speed of 350 MPH, hover ceiling 5000' and service ceiling 10,000'. The design competition was held to select various configurations for a design study phase which would include preliminary engineering, wind tunnel tests and mockup construction.

Of the 19 designs submitted, three were awarded contracts; McDonnell’s unloaded rotor Model 82, Bell's tilt rotor Model 200, and Sikorsky's single rotor S-57. McDonnell’s proposal became the XV-1. Sikorsky's proposal, designated XV-2, had a single blade rotor for helicopter flight, which could be stopped in flight and retracted for cruise transforming it to a fixed wing aircraft with jet propulsion for high speed forward flight. This concept was considered complex enough to require considerable further study and never advanced to the prototype stage. The Bell design became the successful XV-3.

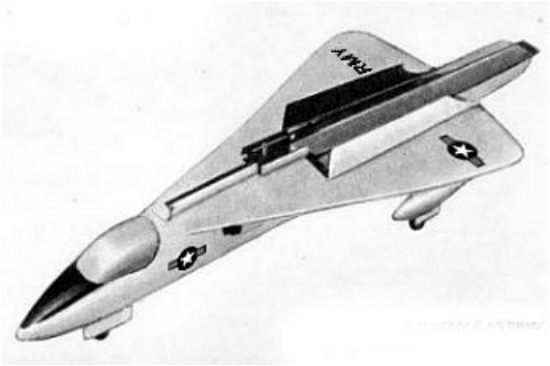

Sikorsky's XV-2

Bell XV-3

The first XV-1 (53-4017) was rolled out of the McDonnell shop on January 18, 1954. Five days later ground tests started and on February 11, the first liftoff was made from the McDonnell helicopter ramp in a 12-20 knot wind. After liftoff the pilot immediately sat down because of the high wind and poor directional control (the tail rotors had not yet been installed). Several more liftoffs were made the same day before the aircraft was removed from flight status and returned to the shop for additional changes and installation of equipment for full scale wind tunnel tests at Ames Aeronautical Lab, Moffett Field California.

The second XV-1 (5344017) was rolled out on 10 May, 1954 commencing ground tests immediately, culminating in the first official flight on14 July, 1954. On 31 August ship 1 was returned from Moffett Field and was placed on flight status. During the XV-1 test program, ship 1 was continually modified and readied for conversion while ship 2's
tests were aimed at systems development. Progress was generally smooth except that on 10 December 1954, while investigating techniques for power off auto-rotational landings, ship 2 nosed over, destroying the rotor and causing minor damage to the fuselage. The landing skids were redesigned and the aircraft was in the shop until 1 April 1955 when ground tests resumed.

In February 1955 the Helicopter Engineering Division flight test operations were moved to Smartt Field, an old Air Corps training field in St. Charles County. A major milestone in the flight test program was reached on 29 April 1955 when the first full conversion from helicopter flight to airplane flight was made by John Noll. Airplane flight time was limited to four minutes because a large quantity of fuel was consumed in the helicopter mode gaining altitude before starting conversion. This was necessary because during conversion several thousand feet of altitude were lost. The remainder of the year was spent in flight test to develop such systems as rotor, propulsion and control. Spring of 1956 brought the Air Force PhaseII evaluation from April to August, flown by Captain Wayne Eggert. Eggert made 39 flights, five full conversions, and on August 18 unofficially broke the world's speed record for rotor craft, at 200 mph.

Air Force comments on their evaluation of the XV-1 were critical in the areas of performance, control complexity and noise levels. McDonnell's contention was that most, if not all of the problems experienced by the XV-1 could be traced back to the twin boom pusher configuration, which was in turn dictated by having to use a radial engine rather than a small, lightweight gas turbine. No orders were forthcoming for XV-l's or any of the proposed follow on versions, and the program was canceled in 1957.

Convertiplane Description

The Convertiplane was designed as a two place aircraft utilizing the "unloaded rotor" principle to determine the feasibility of the concept for larger aircraft. A three bladed, 31 foot diameter rotor with McDonnell pressure jet units at the blade tips was used for helicopter and auto-gyro flight, with a 26 foot wingspan wing to augment this lift at forward speed. A single Continental R975-19 radial engine, with a takeoff power of 550 HP, supplied power either to a fixed pitch pusher propeller or to twin compressors that supplied compressed air to the rotor blade pressure jets. The convertiplane was capable of three distinct flight regimes:

1) Helicopter flight with pressure jet drive and locked propeller.
2) Auto-gyro flight with propeller drive and auto- rotating rotor (pressure jets not operating) producing about 50% of the total lift.
3) Airplane flight with propeller drive and auto- rotating rotor (its speed limited to a low rpm by a governor to reduce rotor drag) supplying only 15% of the total lift (hence the term unloaded rotor).

During helicopter and auto-gyro flight conventional helicopter controls were used (collective and cyclic pitch and tail rotors) along with the limited amount of conventional airplane controls (ailerons, rudders and elevators). In auto-gyro flight, the collective pitch
was fixed - although the cyclic pitch was still used for lateral control. In airplane flight, control was by conventional airplane controls and by lateral rotor tilt.

To make a transition from helicopter to auto-gyro flight the following steps were followed:

1) At sufficient forward speed, reduce collective pitch to 6 and reduce engine power.
2) Switch engine from compressor drive to propeller and increase engine power. At this stage the convertiplane was in auto-gyro flight.
3) At any speed above the wing stall speed, push a shift lever to complete the conversion form helicopter control to airplane control. The above steps were reversed to switch back to helicopter flight.

General Arrangement

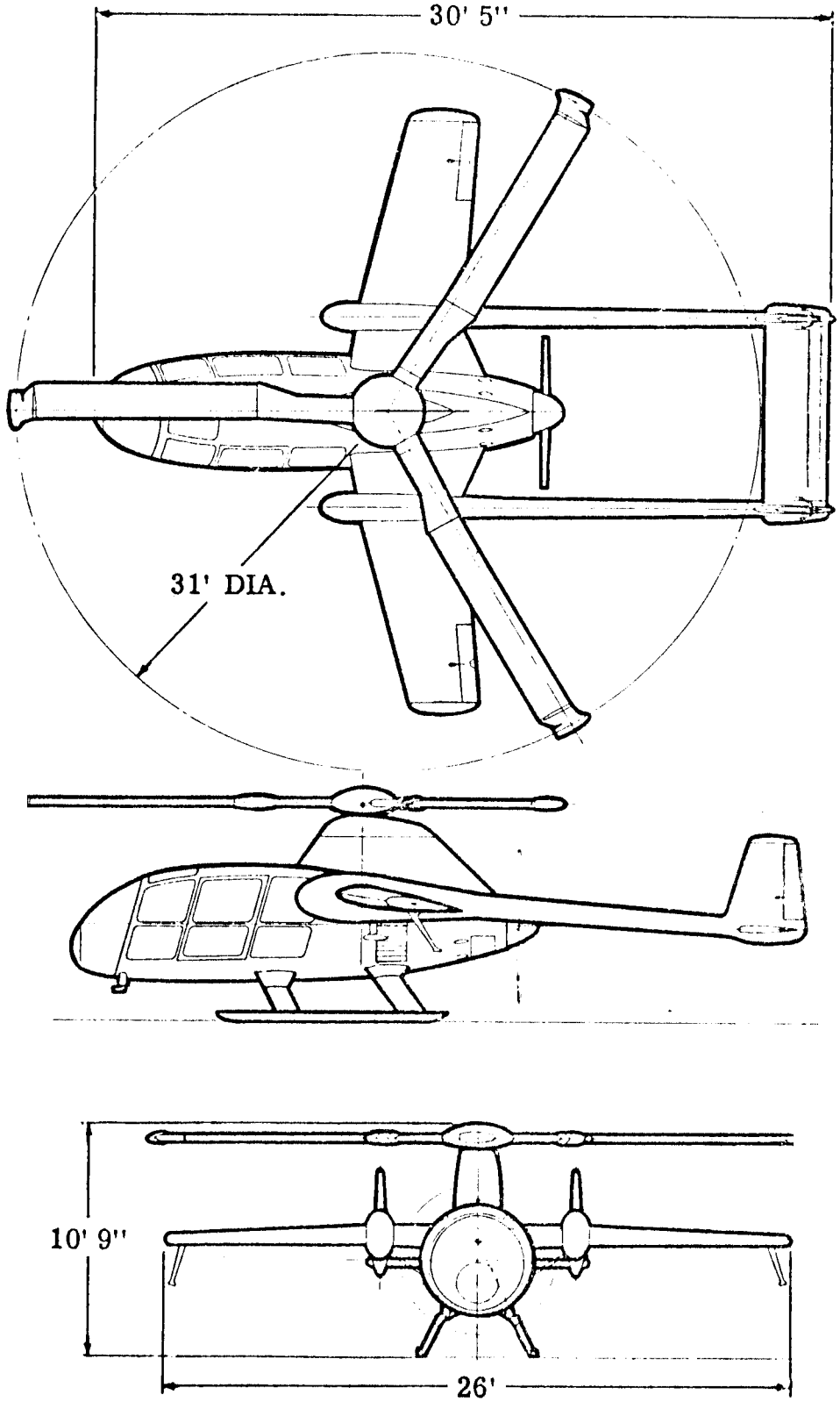

Convertiplane Photos

1) Test pilot John Noll at the controls of the second XV-1 (53-4017) as it makes its first official flight on July 14, 1954. This day was the hottest in St. Louis history, the temperature reaching 115 F. Before this "official" first flight, ship 1 had logged a total of one minute, four seconds flight time in several hovering hops- the first on 11 February 1954. On this July day 13 liftoffs were made for a total of four minutes flight time. The flight was witnessed by representatives of the Army Transportation Board, Navy Bureau of Aeronautics. The XV-1 Safety of Flight Inspection had been completed July 1 and the ship was placed on flight status as soon as the required modifications were completed. 12 July was spent checking out the ship in preparation for this demonstration.

2) The XV-1 was flown as shown here with the outer wing panels and propeller removed on several occasions at speeds up to 95 knots. The first time was on 19 July 1954, five days after the first official flight. The unusually hot weather normally decreased helicopter hover performance and the underpowered. XV-1 required the weight removal to improve its performance. Tripod struts outboard of the skids helped to prevent turnovers. The tests showed that in hover and low speed flight, the wing deflected rotor downwash producing a nose up moment which required so much forward stick movement to trim out, that very little margin was available for forward flight. A 100 pound nose weight was needed to give a level hover attitude. The elevator is on the down stop to minimize nose up moments due to the rotor downwash. The elevator remained in this position until a speed of 20-25 knots was reached.

3) One of the Convertiplanes in low altitude hover flight with negative dihedral outer wing panels. The wings were drooped 10° to see if this would alleviate detrimental effects on the power required to hover and stability problems due to rotor downwash on the wings. No improvement in either was noticed. The original square cross section skids have been replaced with tubular skids having sharper upsweep on the forward end. The original skids had a tendency to dig in when "rolling" landings were made early in the test program. There landings at forward speed were required by improperly adjusted horizontal stabilizer that started flapping up and down when the speed was reduced below 30 knots, creating pitch control difficulty.

4) Rear view of XV-1 showing two blade propeller and rotor pylon cap with hub fairing on. As with any helicopter, the rotor hub produced a large amount of drag and was the subject of much development work. The narrow track of the landing gear is evident in this view. Tail rotors are not required, as in conventional helicopters, to counteract engine torque; but, only to offset the rotor friction torque and to give directional control. Initial thoughts were to use jet controls rather than these rotors, but this proved to be impractical.
Tail rotors were powered by hydraulic motors, and were fixed in pitch control being achieved by changing speed and direction of rotation. Maximum tail rotor speed was 8000 RPM and 8000 RPM clockwise to 8000 RPM counter clockwise could be accomplished in 6/10 second.

5) Ship number 1, in 1957, painted all white and covered with tufts to aid in air flow visualization. This photo illustrates the complex flow in hovering flight - note the tufts pointing down on the outside of the left vertical stabilizer and up on the inside of the right vertical stabilizer. Intake for the engine cooling fan can be seen just above the rear skid strut. Further redesigning of the skids was required to eliminate nosing over tendencies.

6) The second XV-1 at rest on the McDonnell ramp prior to its delivery flight to the National Air and Space Museum in 1957. The aircraft apparently has a brand new aluminum paint job. McDonnell records indicate that her last flight took place on September 16, 1957. John Noll flew the first flight as well as the last flight and 257 of the 284 flights of the test program. This photo accentuates the waspish good looks of the XV-1.

1

2

3

4

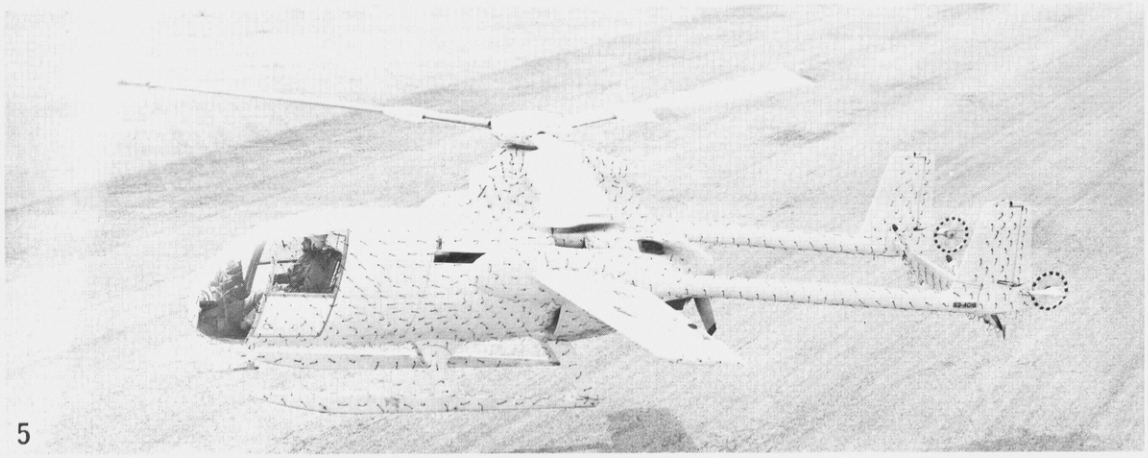

5

6

Original article written by Dick Powers. (Updated and corrected by Ron Downey.)